微波爐 使用手册

型號:T700

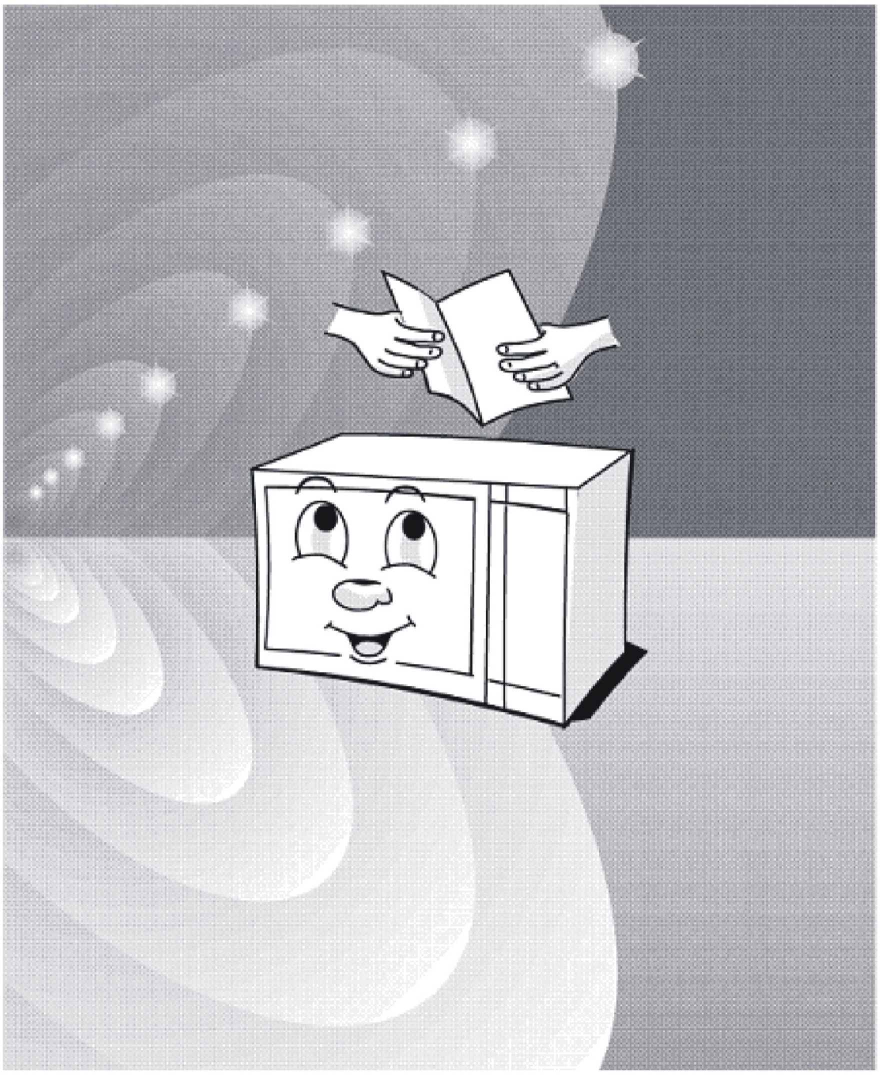

Whirlpool

請在安裝和使用此微波爐前詳細閱讀本使用手册,並保存好以備日後參考。

目録

目録.. 1
規格.. 1
安裝.. 1
性能圖示.. 2
控制板説明.. 2
安全使用要點.. 3
操作方法.. 4
微波爐使用常識.. 4
微波爐的清潔與保養.. 5

規格

型號	T700
額定電壓及額定頻率	230V~50Hz
額定輸入功率	1200W
微波輸出功率	800W
額定微波頻率	2450MHz
定時器	30 分鐘連續可調，帶鈴
外形尺寸（高×寬×深）	295mm × 458mm × 392mm
内腔尺寸（高×寬×深）	206mm × 300mm × 284mm
内腔容積	20L
净重	13Kg

安裝

1．把微波爐内的包裝物全部取出，若微波爐的外殼上附有保護膜，請將保護膜撕掉後再使用。
2．應仔細查看微波爐有否損壞。如有損壞，請立刻聯絡經銷商或本公司特約維修部。
3．20L 微波爐净重約 13 千克，應放置於有足够承托力的水平面上。
4．本微波爐應在通風乾燥，無腐蝕性氣體的環境中使用，遠離高温及蒸氣。
5．切勿在爐頂放置任何物件，并保持與頂部壁櫃距離至少 20 厘米。
6．微波爐兩旁應與墻壁距離至少 5 厘米，爐背應與墻壁至少距離 10 厘米。
7．警告——爲了防止觸電，必須確保此微波爐接地良好。

性能圖示

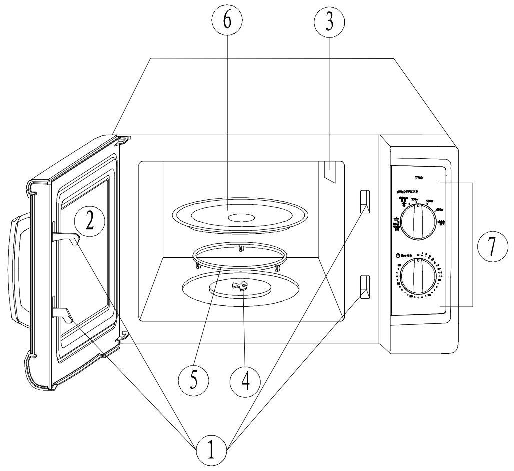

1．門安全聯鎖開關—— 確保：爐門打開，微波爐不能工作；爐門關上，微波爐才能工作。

2．視屏窗——有金屬屏蔽層，可透過網孔，觀察食物烹調情況。

3．波導口——磁控管發射的微波進入腔體的通道。

4．轉軸——帶動玻璃轉盤轉動。

5．轉盤支承——支承玻璃轉盤并按其軌道轉動。

6．玻璃轉盤——裝好食物的容器放在轉盤上，加熱時轉盤轉動，使食物烹調均勻，以達到理想均勻烹調的效果。

7．控制板——詳見控制板說明。

控制板說明

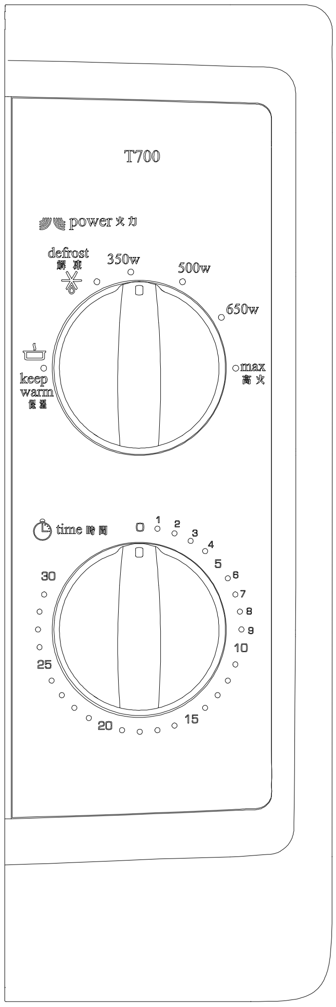

1．定時器——0－30 分鐘選擇定時。

2．火力選擇旋鈕—— 輸出功率連續可調。

高火： 800W 功率輸出

650W 功率輸出

500W 功率輸出

350W 功率輸出

解凍

保温

安全使用要點

使用

1. 使用前請詳細閱讀“使用手册”全部内容。
2. 本微波爐專爲家庭加熱及烹調食物而設計，故不適用於其它工商用途。
3. 警告: 只有在已經提供充分的指導以致於兒童能够采用安全的方法使用微波爐，并且明白不正確的使用會造成危險時，才能允許兒童在無人監控的情況下使用微波爐。
4. 用户使用之前，應檢查所用器皿是否適用於微波爐。
   a. 微波烹調時切勿使用金屬器皿。帶金、銀邊的器皿也不應使用。微波爐中通常使用陶瓷、耐熱玻璃、耐熱塑料或紙質器皿。
   b. 窄頸瓶不可直接放入微波爐烹煮。
   c. 使用保鮮紙遮蓋食物烹調時， 請將保鮮紙一角摺上，使之通氣，煮好後將保鮮紙小心拆開，以免蒸氣灼傷。
5. 使用時先放入轉盤支承及玻璃轉盤，再將盛好食物的器皿放在玻璃轉盤上進行烹調。
6. 爐内無食物時，請不要使微波爐工作，以免空載運行損壞機器。
7. 切勿將一般的水銀溫度計放入爐内邊加熱，邊測量，以免引起打火或損壞。
8. 烹調少量食物時，要多加觀察，防止過熱起火。
9. 當食物在塑料、紙或其它可燃材料制成的易處理容器中加熱或烹調時，應時時注意，防止起火。
10. 烹調中發生冒烟或起火現象時，請不要立刻打開爐門，否則遇空氣會加大火勢，應立即切斷電源。
11. 從微波爐内提取食物和器皿時，應當使用鍋夾或戴上隔熱手套，以免高温燙傷。
12. 爲防止轉盤受損壞，請遵守下列事項:
    a. 用水清洗轉盤時，應先待轉盤冷却。
    b. 切勿置滚熱食品或熾熱容器於冷却的轉盤之上。
    c. 切勿置冰冷食品或冰冷容器於熾熱的轉盤之上。
    d. 注意轉盤的最大負載重量不能超過 5kg.
13. 每次微波爐使用完畢，最好將一盛滿水的玻璃杯置於爐内玻璃轉盤上，避免誤操作損壞機器。
14. 不要用微波爐儲存任何物品。
15. 奶瓶和嬰兒食品罐應經過攪拌或搖動，喂食前應檢查瓶内食物的温度，避免燙傷。
16. 警告: 除有資格的維修人員外，其他人來執行檢修操作都是危險的，包括拆下防止微波能量泄漏的防護蓋等操作。
17. 警告: 如果微波爐門或門封已損壞，則不得再使用，直到經有資格的維修人員修好爲止。
18. 警告: 不要直接加熱裝在密封容器内的液體或其他食物，因爲這樣有可能發生爆炸。
19. 警告: 如果電源軟綫損壞，爲了避免危險，必須由制造廠、其維修部或類似的專業人員更換。
20. 警告: 微波爐屬於有人看管的產品，請在烹調過程中人不要離開現場。
21. 警告: 用微波爐燒開水時要盡量使用無蓋的寬口容器。如要加入咖啡粉、奶粉、麥片或其它衝劑，必須先對開水進行攪拌或擱置幾分鐘稍凉，以免水沸騰而被燙傷。

食物

1．切勿煮帶殼蛋，壓力會使蛋爆裂。另外蛋黃、蛋白也要用牙簽刺穿數次。

警告——已煮好的湯圓或荷包蛋等，馬上取出可能會造成其內部液體沸騰爆破而濺傷人體。注意應打開爐門後，略擱置一會兒，再取出食用。

2．煮食時間不宜過長，因爲煮食不足可繼續，而過度則無法補救。

3．烹調食譜所提供的是烹調的大約時間,影響烹調時間的因素有：所喜歡的煮熟程度,食物的初温、形狀大小、份量和使用器皿的形狀、大小以及食物的排列、遮蓋、翻攪等。請參閱食譜中的“微波爐烹調技巧”，再參照這些因素，適當修正烹調時間。

4．表面無孔的食物（ 如蛋、栗子、馬鈴薯、香腸等),請去皮或在外皮上開一裂縫或叉幾個小孔，否則受熱膨脹，可能發生爆裂。

5．不可用微波爐煎炸食物。

操作方法

將食物放入微波爐内:

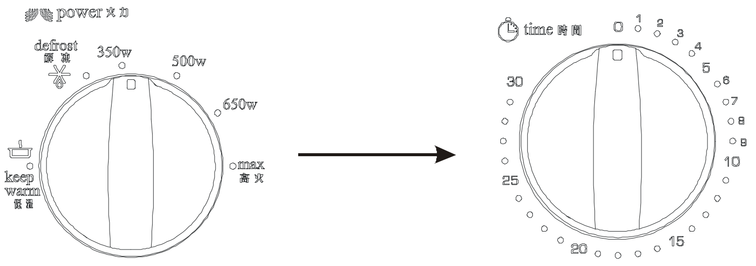

● 轉動【火力選擇旋鈕】至所需的火力。

● 轉動【定時器】至正確的烹調時間

注意：烹調時間調好後，微波爐就開始烹調。

▲ 若您欲定的時間短於二分鐘時，則先將【定時器】旋至超過三分鐘，再回旋到所希望的時間。

▲ 當微波爐不需工作，或食物在指定時間前取出，應將【定時器】撥回【零】時位置。

▲ 當設定烹調程序後，如欲微波爐停止工作，只需打開爐門，爐門安全聯鎖開關會自動斷開，微波爐停止發放微波。

▲ 如不需應用剩余的烹調時間，在關閉爐門前應先將【定時器】撥回【零】時位置。

微波爐使用常識

1．如果微波爐不工作，應檢查:

▲ 電源插頭是否插好。

▲ 爐門是否關好。

▲ 定時器是否調節好時間。

▲ 家電保護器是否跳閘或燒斷。

2．爐内無食物，而微波爐被偶然啓動。請立即把【定時器】撥回【零】時位置，停止其工作。

3．當電壓波動時，微波爐仍能工作，只是受電壓偏高或偏低的影響，微波輸出功率會相應升高或降低,故烹調時間及效果會有所變化,這是屬於正常現象。

微波爐的清潔與保養

注意：切勿使用强洗滌劑、汽油、研磨粉和金屬刷來清洗爐子的任何部位

1．清洗爐腔之前，須關閉微波爐，并從插座上拔去電源綫插頭。

2．經常保持爐腔清潔。當食物或湯水濺到爐内壁時，可用濕布擦去。如爐内壁很髒則可使用軟性洗劑,切勿使用粗糙、磨損性的洗劑。

3．必須經常清潔玻璃盤。可先用温熱的肥皂水清洗，再用清水洗净擦乾。

4．必須經常擦洗轉盤支承和爐腔底面。請用軟性劑洗爐腔底面，而轉盤支承則可用温熱的肥皂水洗，清洗後抹乾放回原處。

5．必須經常清潔門的密封面。可先用軟乾布浸肥皂水清洗，再用軟乾布擦净。

6．微波爐外表面用軟乾布浸肥皂水清洗後，再用軟乾布擦净。注意不要讓水滲入爐縫或通風口。

7．如控制板被弄濕，則請用軟的乾布抹擦， 不能用粗糙、 磨損性的洗劑來擦控制板，擦控制面板時，請將爐門打開，以免誤操作 。

8．爐内外如有蒸氣凝成的水滴，可用軟布擦净。

9．爐内如有异味，可用一杯水加幾匙檸檬汁煮 5－7 分鐘，即可消除。

10．微波爐若長期不用，應拔掉電源插頭， 放在通風乾燥，没有腐蝕性氣體的環境中。

11．爐子發生故障，必須由本廠培訓的專業維修人員檢修，其它任何人拆修將是危險的。

Instructions for use

Model: T700

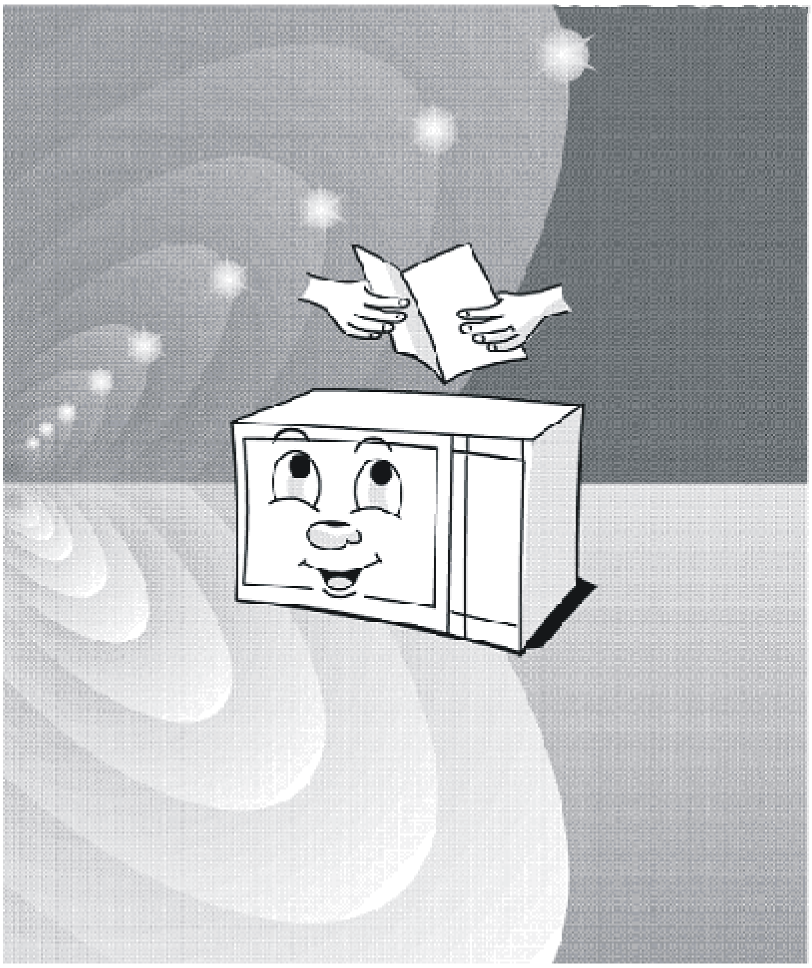

Whirlpool

Content

Content 1
Specifications 1
Installation 1
Appearance diagram 2
Control panel 2
Safety usage important points 3
Operation methods 4
Microwave oven usage common sense 4
Microwave oven cleaning and care 5

Specifications

Model	T700
Rated Voltage and frequency	230V～50Hz
Rated power input	1200W
Microwave output	800W
Rated frequency	2450MHz
Timer	Can be rotated within 30mins, with bell.
Outside Dimensions	295mm×458mm×392mm
Oven Cavity Dimensions	206mm×300mm×284mm
Capacity	20L
Net weight	13kg

(Note: the dimensions are in order of height, width, depth).

Installation

1. Take out all packing from the oven. If there is protective film over the oven, tear it before use.
2. Check carefully for damage. If any, please contact dealer or service.
3. 20L oven weight is approximately 13 kg, place somewhere supports.
4. Use in windy and dry area, no acid and keep away from heat and steam.
5. Place no objects on top, and keep a distance of 20cm from cabinet.
6. The distance between the two sides and the wall should amount to 5 centimeters at least, and the back should be more than 10 centimeters away from the wall.
7. <u>WARNING: To prevent shock, the oven must be grounded.</u>

Appearance diagram

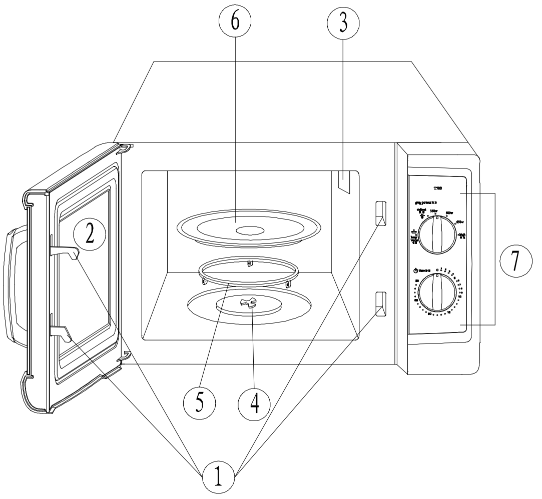

1. Door safety lock system: to ensure when the door is opened, the oven doesn't work; when the door is shut, the oven could work.
2. The Window: there is a metal shield layer, it could be observed of the cooking process through the net holes.
3. Wave-guide hole: the magnetron would emit microwave which enters the cavity through it.
4. Shaft: it would turn around the glass plate.
5. Turntable support: these support the turntable and turn around the circle.
6. Glass turntable: food container is placed on the turntable and turns when heated to make food cooked evenly and achieve the ideal even cooking effect.
7. Control panel: more detail to be seen on control panel description.

Control panel

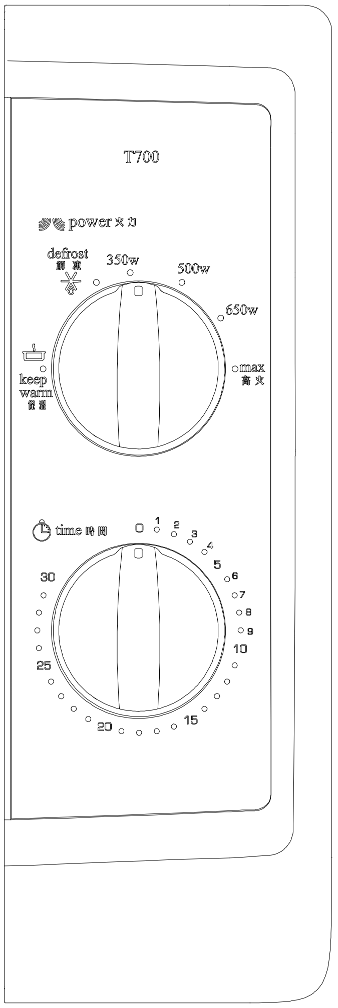

TIME KNOB

Be used to set time within 30 minutes

POWER KNOB

Output power can adjust continuously.

Max: 800w

650w

500w

350w

Defrost

Keep warm

Safety usage important points

Usage

1. Read "USER MANUAL" before use.
2. Oven designed solely for home cooking not for commercial use.
3. **Warning：Children should be allowed to use oven only when realized the danger of it and knows how to use it correctly without adult supervisions.**
4. Before use, check if container usable in microwave oven.
    A. Cooking with microwave does not use metal rack or other metal container. Porcelain, heat resistant glass or heat resistant plastic may be used.
    B. Narrow neck bottle is not allowed in oven.
    C. When using film protecting food in cooking, open a corner to let steam out. Careful tear it lest burns occur.
5. Before using the oven, put the support and turntable into place before placing container with foods onto the turntable for cooking.
6. If no food in microwave oven, do not make oven work lest machine damaged.
7. No weatherglass can be heated in the oven and take measure lest fire or damage.
8. Cooking little food observe frequently lest strike fire.
9. When food in plastic, paper or other simple container cooked take care of fire.
10. During cooking, fire or smoke occur, don't open the door immediately lest fire become uncontrollable but cut power.
11. Taken out of food or container with hand glove or clamp lest burns.
12. To prevent damage to the turntable, please observe the following items:
    A. Cool down the turntable before washing it with water.
    B. Never place hot food or container onto a cooled turntable.
    C. Never place freezing food or container onto a hot turntable.
    D. Note the maximum weight to be placed on the turntable is 5kg.
13. Every time finished use, put a cup of water on plate to prevent damage to machine.
14. Do not store food in oven.
15. Milk bottle or baby food stirred and checked for coolness lest burns inflicted.
16. Warning：Except qualified serviceman, no other should presume to repair, and it is dangerous to tear away the protective shield and other operations.
17. Warning：If oven door or seal damaged, do not use it, until qualified person serviced.
18. Warning：Don't heat the liquid or other food in the sealed container directly, so as not to explode.
19. Warning: If the power supply soft wire damaged, it must be changed by the manufacturer, service department or qualified personal.
20. Warning：Microwave oven need looking care of, user must be present during cooking.
21. Warning：If power cord is damaged, it must be replaced by manufactory, service department or similar career man in case of danger.

Food

1. No boiling of shelled eggs lest pressure make exploding stir before cook.
   WARNING: Already cooked bun or eggs wait a while to take out of the oven lest exploding cause of inner liquid boiling, you can take it minutes later after opening the door.
2. Do not cook too long: continue to cook if shortage, it can't be made up if over.
3. In menu cooking time is approximate, time influences are: doneness prefer, first temperature, shape, number and arrangement, cover and stir, etc. Please read cooking techniques "oven cooking techniques", and adjust time with these references.
4. Food with no holes (egg, chestnut, potato, and sausage), scratch skin or make cracks lest exploding due to expansion.
5. Generally, forbid heavy oil frying.

Operation methods

Place food in oven.

1. Turn **POWER** knob select the need power.
2. Turn **TIME** knob to set cooking time.

Note: After adjust the cooking time, microwave start to work.

- If you want to reserve a time no more than 2 min, you need turn **Timer** over 3 min, then turn back the time you wanted.
- If the oven no need to work or taking food out before the time designed, you should turn **Time** knob to "0".
- When designed the cooking program, if you want the oven stop working, just open the oven door, the door safety lock system will shut off automatically, microwave stop.
- If no need to use the left cooking time, you should turn **TIME** knob back to "0"

Microwave oven usage common sense

1. If microwave dose not work, you should check the following question:
   - If the power supply plug insert well.
   - If the oven door closed perfectly.
   - If the timer adjust time well.
   - If the household appliance protective switch shut off or fuse burned off.
2. If no food in oven while microwave be started by chance, please turn TIME knob to "0" immediately to make it stop.
3. When voltage fluctuates, oven works still only output power may have affected to have bad influence on cooking results and it is normal.

Microwave oven cleaning and care

> NOTE
>
> Never use powerful cleaning agent, benzine, sand powder or metal brush to clean any parts of the oven.

1. Before clean cavity, shut up the oven, and plug out from socket.
2. Keep cavity clean regularly. When splash occurs, wipe with wet cloth. If oven is dirty clean with soft detergent but no scratches.
3. You must often clean metal rack first with warm soup water then with clean water and dry it.
4. You must often wipe shaft and cavity base doing it use soft detergent. Shaft may be washed with soup water and place where it is.
5. You must regularly wash seal and wash first with soft cloth, and then soft dry cloth to clean.
6. Outer surface of oven washed, and cleaned with soft cloth. Water is forbidden to enter air duct.
7. If control board is wet, please use soft dry cloth clean It and it's forbidden to wipe with abrasive material to wipe control board please open the oven to prevent misconduct.
8. Use soft cloth to wipe steams of oven.
9. If bad taste happens, use a cup of water and several spoon of lemon juice to boil for 5-7 minutes to eradicate it.
10. If oven is not used for a long time plug out and place in dry windy place where there is no eroding gas.
11. If malfunction occurs, it must be checked by this factory's servicemen otherwise very dangerous to anybody.